Model 4202 Cold $_2$ Warm Hydrotherapy Console
A versatile and efficient hydrotherapy system for treating multiple athletes. Both warm and cold whirlpool tanks offer whole-body and extremity immersion. Water temperatures are precisely maintained with an internal refrigeration system. No need to add ice or hot water. Standard protocol recommends draining and cleaning only once a week. This self-contained unit fits through a 36” x 80” door and can be installed in new or existing hydrotherapy areas with minimum site preparation.

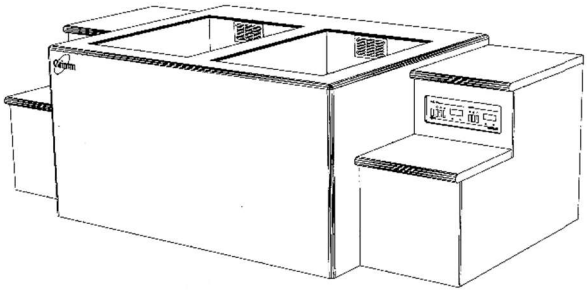

Stainless Steel Tanks
Both tanks are 36” long, 24” wide, and 28” deep with a capacity of 97 gallons. They are formed and welded from 14-gauge Type 304 stainless steel into a seamless unit with coved corners for easy cleaning. These high-quality stainless-steel tanks assure maximum sanitation and provide a lifetime of durable service.

Corian Surface
The exterior is covered with Cameo White Corian solid surface material. This comfortable and easy to clean surface is extremely durable. A wide variety of Corian colors is available to select from for the step surfaces and optional team logo inlay.

Hydrotherapy System
Independent dual-speed pumps provide circulation for each tank. Press the timer button and hydrotherapy action is delivered through two Comfort-Flo nozzles for 20 minutes. Air controls activate turbo-boost for smooth, high-volume air/water flow.

Cartridge Filters
Water cleanliness and clarity is maintained with 100% circulation through replaceable cartridge filters.

Water Level Controls
Both tanks have dual level automatic controls to maintain a constant 26” or 24” deep water level. These eliminate manual filling, replace water volume displaced by immersion, and help refresh the tanks.

Heat Recovery System
The unique energy efficient refrigeration system warms the right tank with heat recovered while cooling the left tank. The right tank can also be switched from warm to cold when both tanks are needed for cryotherapy.

Temperature Controls
Electronic controls accurately maintain and digitally display water temperatures in both tanks. The left tank is adjustable from 40°F to 70°F and the right tank from 40°F to 110°F *(70°F to 110°F with Switchable Warm Tank Delete Option)*. Temperature is measured and can be set to within 0.1°F. A Press-To-Set button displays the set point temperature and adjustment is made with a tamper proof screwdriver slot.

Foamed-In-Place Insulation
At least six inches of foamed-in-place polyurethane insulation surrounds and supports both tanks. This exceptional insulation significantly reduces heat loss. CRYOTherm will pay for itself with energy and water savings when compared to conventional whirlpools

Installation
Delivery, installation supervision, and field-testing are provided for the CRYOTherm Cold $_2$ Warm Hydrotherapy Console.

Optional Accessories
- Corian Team Logo Inlay
- Switchable Warm Tank Delete
- Third Party Field Evaluation

4202.07.29.19

Specifications

Front View

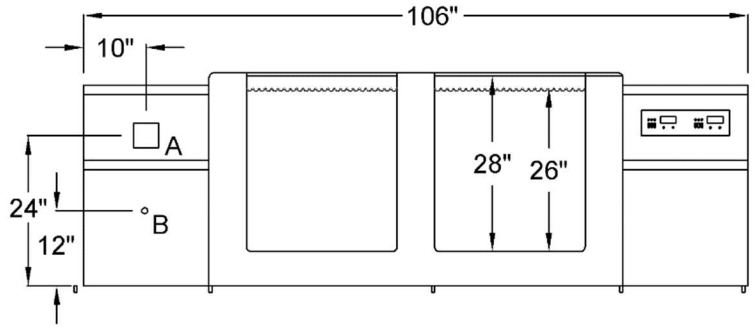

Right Side View

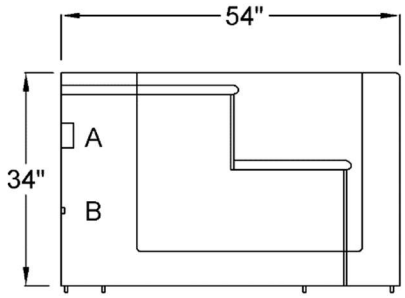

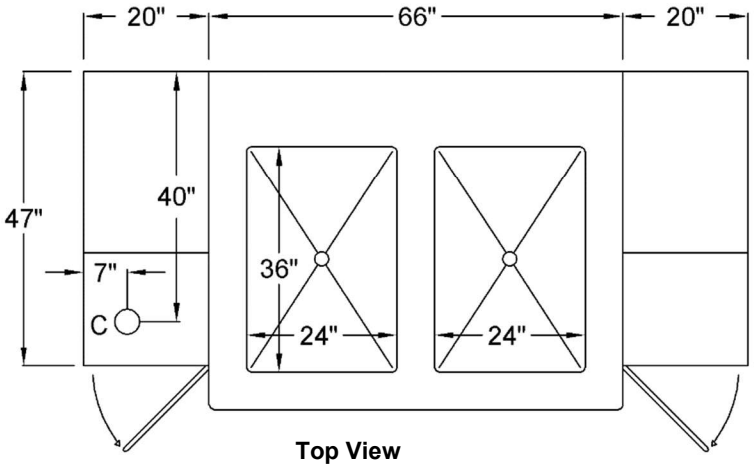

Top View

Left Tank……..40°F to 70°F
Right Tank……40°F to 110°F
Tank Capacities……...97 gal.
Weight (Filled)……..…..3,422 lb.
Weight (Empty)……1,800 lb.

FDA Listed Medical Device

A = Electrical Connection

208V, 60Hz, Single Phase 4-Wire
Rating at Full Load = 20 Amp Max
* Circuit Breaker = 2-Pole, 30 Amp, GFCI
* Wall Outlet = NEMA 14-30R

(* Supplied by Customer)

B = Cold Water Supply Connection

Pipe Size = ¾ FPT Brass
Backflow Preventer = Included with CRYOTherm
Water Temperature = 45°F Min. 80°F Max.
Water Pressure = 20 PSI Min. 60 PSI Max.

C = Drain

Pipe Size = 2” Copper
Flow = 40 GPM
Floor Sink with 4-Inch Drain is recommended

One-Year Warranty
The CRYOTherm warranty applies to purchaser and any subsequent owner. Grimm Scientific Industries, Inc. (warrantor) warrants this product to be free from defects in material and workmanship under normal use for one year from the date the product is installed. The warrantor may opt to replace the product, rather than repair it. This warranty does not cover damage resulting from accidents, improper use, or maintenance of this product, and in no case shall warrantor’s liability exceed the original purchase price paid for the product. This warranty is expressly in lieu of all other express warranties.

Contact Us:
Grimm Scientific Industries, Inc
P.O. Box 2143
Marietta, OH 45750
Phone….800-223-5395
Fax…....740-374-5745
E-mail….info@grimmscientific.com

4202.07.29.19